TB Wood's

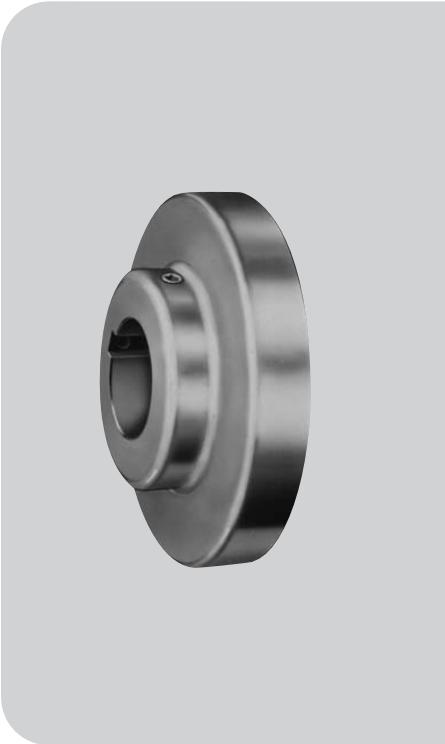

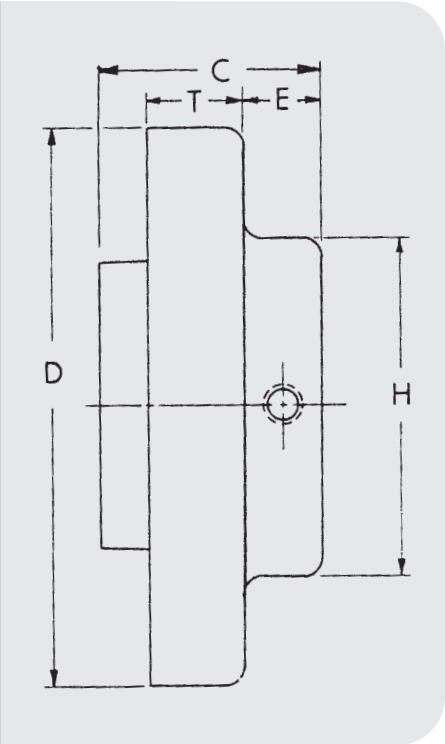

FLANGES

Type S flanges are made of high-strength cast iron and are bored-to-size for slip fit on standard shafts. They are easy to install and remove, and are available from stock in a wide range of bore sizes. Type S couplings may be used with any of the sleeves shown on page F1—5.

Bore Tolerances for Types J and S Flanges, SC Hubs

These bores provide a slip fit.

Bore (in.)	Tolerance (in.)
Up to and including 2”	+ .0005 to + .0015
Over 2”	+ .0005 to +.0020

DIMENSIONS (in.)

Coupling Size	DIMENSIONS C	D	E	G	H	L	T	X	Wt. (lbs.) ■	STOCK BORES ① Inches 1/2	5/8	3/4	13/16	7/8	15/16	1	1 1/16	1 1/8	1 3/16	1 1/4	1 5/16	1 3/8	1 7/16	1 1/2	1 9/16	1 5/8	1 11/16	1 3/4	1 7/8	1 15/16	2	2 1/16	2 1/8	2 3/16	2 1/4	2 3/8	2 7/16	2 1/2	2 5/8	2 3/4	2 7/8	3	3 3/8	3 7/16	3 5/8	3 7/8	3 15/16
5S	1-11/32	3.250	29/64	23/32	1-7/8	2-13/16	19/32	31/32	1.1	O	X	X	X	X	X	X	X	X	X	X																										
6S	1-5/8	4.000	17/32	7/8	2-1/2	3-1/2	25/32	1-3/32	1.9		O	X		X	X	X	X	X	X	X	X	X	X	X																						
	1-5/16	4.000	17/32	7/8	2-1/2	3-1/2	25/32	1-3/32	1.8																	X		X																		
	1-9/16	4.000	25/32	7/8	2-13/16	4	25/32	1-3/32	1.8																				X																	
7S	1-27/32	4.625	11/16	1	2-13/16	3-15/16	25/32	1-5/16	2.6		O	X		X	X	X	X	X	X	X	X	X	X	X		X			X																	
8S	2-3/32	5.450	3/4	1-1/8	3-1/4	4-7/16	29/32	1-1/2	4.4			O		X	X	X	X	X	X	X	X	X	X	X	X	X	X	X	X	X		X	X													
	1-15/16	5.450	1-1/32	1-1/8	3-1/4	5	29/32	1-1/2	3.7																											X										
9S	2-13/32	6.350	25/32	1-7/16	3-5/8	5-1/16	1-1/32	1-3/4	6.8					O	X	X	X	X		X		X	X	X	X	X	X	X	X	X	X	X	X	X	X		X									
	2-9/32	6.350	1-1/4	1-7/16	4-1/8	6	1-1/32	1-3/4	6.2																															X						
10S	2-23/32	7.500	13/16	1-5/8	4-3/8	5-11/16	1-7/32	2	10.5									X		X		X	X	X	X	X	X	X	X	X	X	X	X	X	X	X	X	X	X	X						
	2-11/16	7.500	1-15/32	1-5/8	4-3/4	7	1-7/32	2	9.8																																X					
11S	3-7/16	8.625	1-1/8	1-7/8	5-1/4	7-1/8	1-1/2	2-3/8	16.6											O		X	X	X		X		X	X		X	X	X		X	X				X	X	X	X	X			
	3-1/16	8.625	1-9/16	1-7/8	5-5/8	8	1-1/2	2-3/8	16.4																																				X	
12S	4	10.000	1-9/32	2-5/16	5-3/4	8-1/4	1-11/16	2-11/16	26.6															O		X		X	X			X	X			X			X	X	X		X	X	X	X	
13S	4-3/8	11.750	1-5/16	2-11/16	6-3/4	9-1/4	1-31/32	3-1/16	45.2																						O		X			X					X		X	X			X
14S	4-1/2	13.875	1-1/16	3-1/4	7-1/2	9-7/8	2-1/4	3-1/2	69.1																						O										X					X	
16S	6	18.875	2	4-3/4	8	14-1/4	2-3/4	4-1/4	125.3																																	O					

X in the chart denotes finished bore with keyseat and 2 setscrews; O is plain bore suitable for reboring.

■ Approximate weight for each flange.

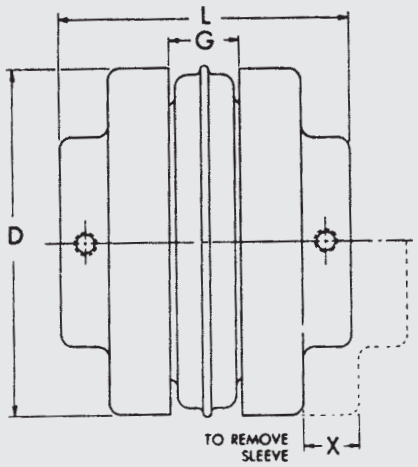

COUPLINGS

Type S Sure-Flex couplings are normally supplied with the two-piece E sleeve. However, any of the sleeves shown on page F1—5 can be used with Type S flanges.

Spacing between internal flange hubs equals L minus 2 times C. Spacing between shafts should be greater than 1/8 in. and less than L minus .85 times the sum of the two bore diameters.

To order complete couplings, specify coupling size with flange symbol (S) giving bore and keyseat. Refer to page F1—3 to order the required coupling.

DIMENSIONS (in.)

STOCK BORES Millimeters																						Max. Bore		SHALLOW KEYSEAT DIMENSIONS ②								
14	15	16	19	20	24	25	28	30	32	35	38	42	45	48	50	52	55	60	65	70	80	90	① Standard Keyseat	② Shallow Keyseat	Bore	K.S.	Key	Bore	K.S.	Key	Bore	K.S.	Key
X	X	X	X	X	X	X	X																1-3/16	1-1/4	1-1/4	1/4 X 1/16	1/4 X 3/16 X 1-3/8	...	...	...	...	...	...
	X		X	X	X	X	X	X	X	X	X												1-7/16	1-1/2	...	...	...	...	...	...	...	...	...
																							...	1-3/4	1-1/2 & 1-5/8	3/8 X 1/8	3/8 x 5/16 X ▲	1-3/4	3/8 X 1/16	3/8 X 1/4 X 1-1/4	...	...	...
																							...	1-7/8	...	...	...	...	...	...	1-7/8	1/2 X 1/16	1/2 X 5/16 X 1-9/16
			X		X	X	X	X	X	X	X	X											1-5/8	1-7/8	1-7/8	1/2 X 1/8	1/2 X 3/8 X 1-7/8	...	...	...	...	...	...
					X		X	X	X		X	X	X	X									1-15/16	2-1/4	2-1/8	1/2 X 3/16	1/2 X 7/16 X 2-1/8	...	...	...	...	...	...
																							...	2-3/8	...	...	...	2-3/8	5/8 X 1/8	5/8 X 7/16 X 1-7/8	...	...	...
					X			X	X		X	X	X	X									2-1/2	2-3/4	...	...	...	...	...	...	...	...	...
																							...	2-7/8	2-7/8	3-/4 X 1/8	3/4 X 1/2 X 2-1/4	...	...	...	...	...	...
								X	X	X	X	X	X	X	X	X	X	X					2-3/4	3-1/8	2-7/8	3/4 X 1/4	3/4 X 5/8 X 2-3/4	...	...	...	...	...	...
																							...	3-3/8	...	...	...	3-3/8	7/8 X 3/16	7/8 X 5/8 X 2-5/8	...	...	...
											X	X	X	X		X		X		X	X		3-3/8	3-7/16	3-7/16	7/8 X 3/16	7/8 X 5/8 X 3-7/16	...	...	...	...	...	...
																							...	3-7/8	3-7/8	1 X 1/4	1 X 3/4 X 3	...	...	...	...	...	...
															X			X	X	X	X	X	3-7/8	3-15/16	...	...	...	...	...	...	...	...	...
																							4-1/2	...	...	...	...	...	...	...	...	...	...
																							5	...	...	...	...	...	...	...	...	...	...
																							5-1/2	6	...	...	...	...	...	...	...	...	...

① See charts on page F1—13

② Some large bore Type S flanges are supplied with shallow keyseats. In these cases, a rectangular key is furnished. The bores involved are listed above.

▲ 1-5/8 for 1-1/2 bore, 1-5/16 for 1-5/8 bore.